GLVS02-DX/GLVS02-SX

GLVS02-SX GLVS02-DX

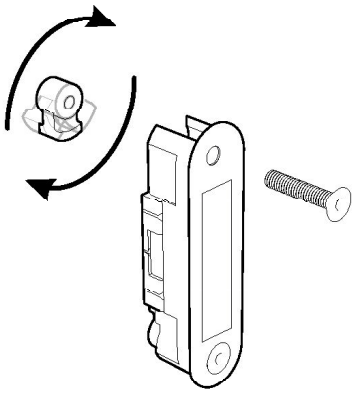

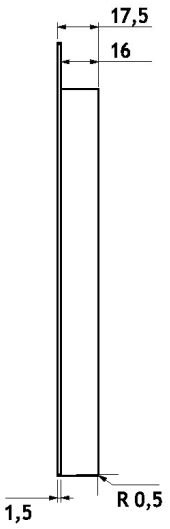

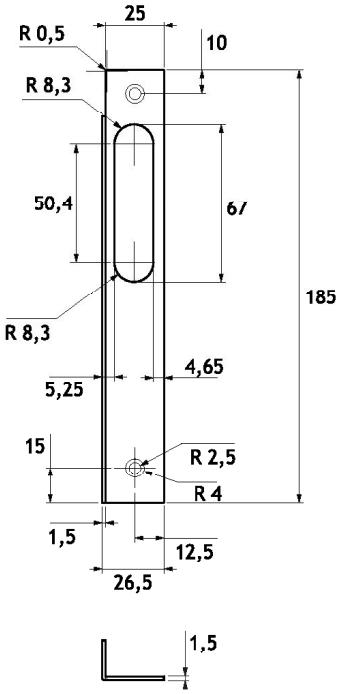

Riscontro magnetico a muro con battuta per serrature
Adatto ai soli modelli GLV01C, GLV01P e GLV01M
Disponibile in versione destra (cod. GLVS02-DX) e sinistra (cod. GLVS02-SX)
Realizzata in acciaio inox Aisi 304 e materiale plastico

Magnetic wall strike with stop for door locks
Fits GLV01C, GLV01P e GLV01M models only
Right (code GLVS02-DX) and left (code GLVS02-SX) models available
Aisi 304 stainless steel and plastic manufacturing

			SSS